Leapers Semiconductor

Application Note

— HPD Power Module —

V2.1

Table of contents

1. Product Introduction 4

1.1. Product Features 4

1.2. Circuit Diagram and Outline Drawing 4

1.3. Detailed Dimensions and Pin Layout 5

2. Precautions 6

3. Installation Instructions 6

3.1. Recommended Installation Procedure 6

3.1.1. Mounting the PCB to the HPD Power Module 7

3.2. PCB 10

3.3. Press-fit 11

3.3.1. Press-fit Pins 11

3.3.2. Installation of Press-fit Pins 12

3.4. Preparation of the heat dissipation system 15

3.4.1. Heatsink 15

3.4.2. Sealing Ring 16

3.4.3 Coolant 19

3.5. Mounting the Module to the Heatsink 20
3.5.1. Installation of heatsink screws 20
3.5.2. Sequence for tightening heatsink screws 20
3.6. Mounting the Module to the Bus-bar 21
3.6.1. Tightening torque of power terminals 21
4. Storage and Transportation 23

1. Product Introduction

1.1. Product Features

- Low stray inductance
- High power density
- Standard housing
- High-performance Si_3N_4 AMB
- Thermistor inside
- Direct-Cooled Pin Fin Base Plate
- Press-fit Contact Technology
- High-reliability epoxy resin potting

1.2. Circuit Diagram and Outline Drawing

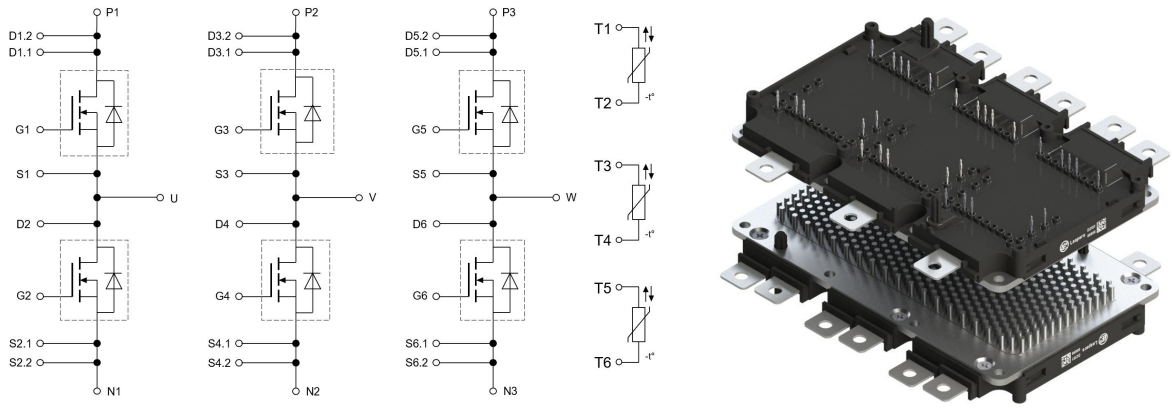

Figure 1: Circuit diagram & housing

1.3. Detailed Dimensions and Pin Layout

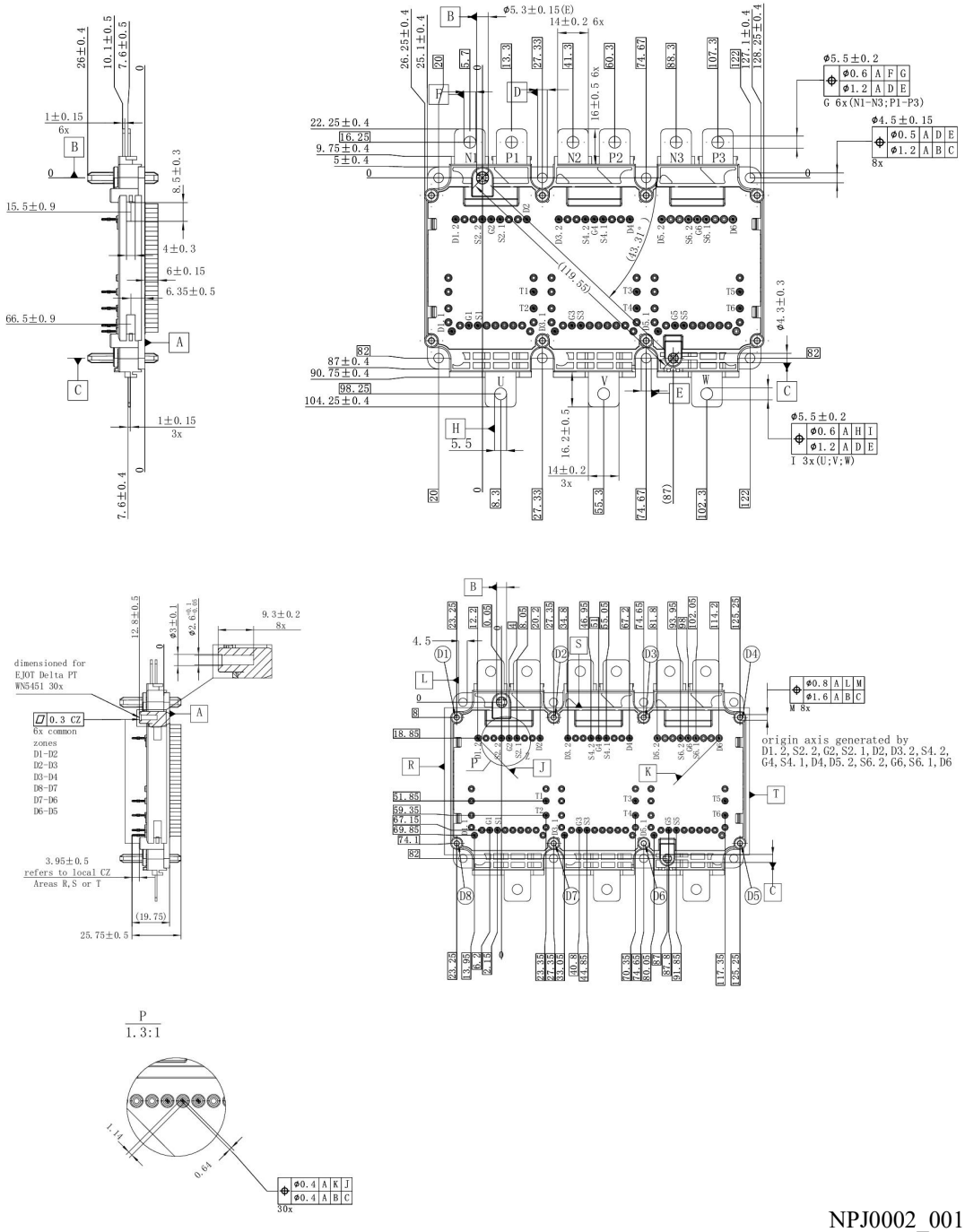

NPJ0002_001

Figure 2: Pin configuration & housing

2. Precautions

The gate oxide layers of IGBTs and MOSFETs are only tens of nanometers thick and are sensitive to electrostatic discharge (ESD). ESD may cause premature damage or failure of IGBT or MOSFET modules. To prevent such damage, the products are delivered in suitable antistatic packaging. When installing or removing modules, operate in an ESD-protected environment. For details, refer to ESD installation guidelines such as IEC 61340-5-1 and ANSI/ESD S20.20. The ESD symbol is shown in Figure 3.



Figure 3: ESD symbol

3. Installation Instructions

3.1. Recommended Installation Procedure

When mounting the module to the heatsink, the module may deform due to factors such as heatsink flatness and screw torque. Because pin position tolerance is important for PCB assembly, it is recommended to first press-fit the PCB onto the module and then mount the module to the heatsink. To avoid unnecessary mechanical stress on the PCB, after mounting the power module to the heatsink, the PCB should be fixed to the module with

screws. Installation consists mainly of the following steps:

- Position the PCB on the HPD power module
- Press-fit the PCB onto the module
- Install the sealing ring in the heatsink
- Mount the module with the PCB attached onto the heatsink
- Secure the module power terminals to the busbar

Note: When self-tapping screws are selected to fix the PCB to the module, it is recommended to install the self-tapping screws after press-fitting the PCB.

3.1.1. Mounting the PCB to the HPD Power Module

After soldering is completed, mechanical installation is recommended to eliminate stress between the module and the PCB. The PCB can be fixed to the module with self-tapping screws through the eight PCB mounting brackets on the module (see Figure 4), thereby reducing mechanical stress and improving system reliability.

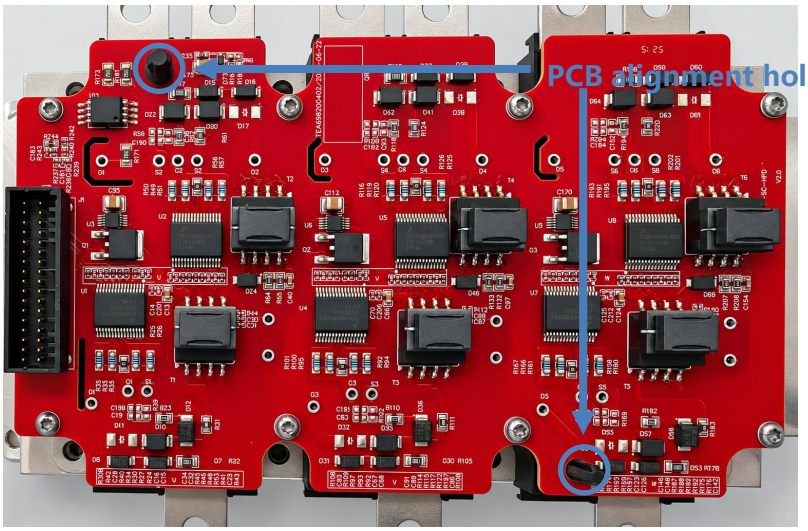

Figure 4: Module PCB positioning

Leapers recommends using self-tapping screws as shown below. Recommended model: EJOT Delta PT WN5451 30×10 (Ensure that the effective thread engagement length of the self-tapping screw in the HPD-SiC module’ s PCB mounting hole is 6–10 mm; adjust this length as necessary according to the PCB thickness.).

The self-tapping screw must be installed vertically (as shown in Figure 5). For seating and tightening parameters, refer to Table 1 to ensure that a stable thread is formed in the fixing hole and that the fixing hole does not crack.

Recommended self-tapping screw installation sequence: D2→D6→D3→D7→D4→D8→D1→D5. The PCB mounting hole positions are shown in Figure 2.

The recommended torque setting curve for the electric screwdriver is shown in Figure 6, and the recommended installation parameters are shown in Table 1.

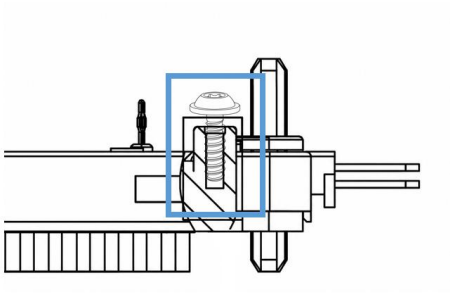

Figure 5: Example of self-tapping screw installation

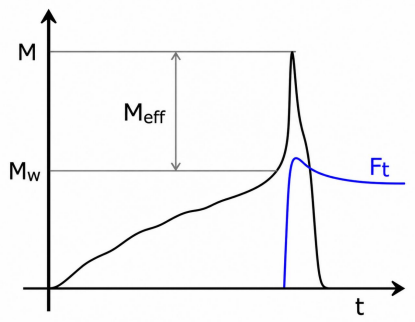

Figure 6: Recommended torque setting curve for electric screwdriver

		Unit	Min.	Typ.	Max.	Remarks
1	Seating torque (Mef)	N·m	0.4	0.45	0.5	Based on 2 mm thick PCB and specified screw; recommended tightening speed 50 rpm; permissible tightening torque tolerance ±10%.
2	Tightening torque (Meff + Mw)	N·m		0.90		
3	Mounting speed	rpm	400	-	600	Lower than 200 rpm is not recommended
4	Effective thread engagement length	mm	6		9	

Table 1: Recommended installation parameters

3.2. PCB

The PCB selected by the customer is recommended to be a standard FR4 board with electroless tin plating. PCB manufacturing processes may refer to IEC 60352-5 and IEC 60747-15, and materials should comply with the relevant requirements of IEC 60249. The PCB via cross-section is shown in Figure 7.

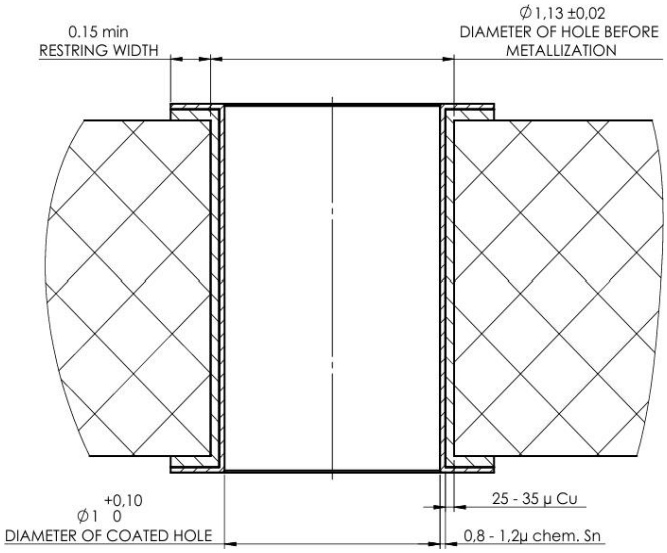

Figure 7: PCB via cross-section

Note: This dimension refers to the end-hole diameter for the press-fit process. For soldering, the recommended diameter is 1.55 ± 0.05 mm.

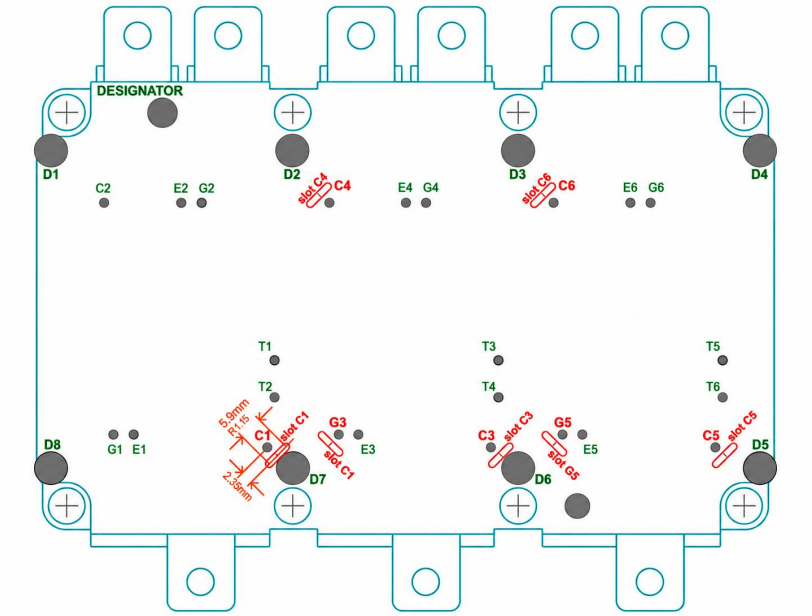

Figure 8: Schematic diagram of PCB slotting to relieve stress

In actual PCB installation, PCB stress inevitably exists. Customers may slot the PCB as required to release stress. Recommended PCB slotting positions are shown in Figure 8.

During soldering, ensure that the solder joint is reliable and firm, while avoiding damage to the PCB or HPD power module housing due to excessive temperature or prolonged soldering time. According to the relevant requirements of IEC 60068-2, the soldering peak temperature must not exceed 245 °C, and the maximum soldering time shall be 5 s or less.

3.3. Press-fit

3.3.1. Press-fit Pins

The press-fit pins used in Leapers Semiconductor HPD modules meet strict press-fit standards and can be connected by press-fit and may be connected by either press-fitting or soldering. The press-fit pins are shown in Figure 9.

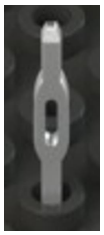

Figure 9: Leapers module press-fit pins

To ensure connection reliability, it is not recommended to reuse modules and PCBs that have undergone multiple press-fit processes. For PCBs on which modules have been replaced twice, and for modules that have been press-fitted once, subsequent soldering is recommended to improve connection reliability.

3.3.2. Installation of Press-fit Pins

The press-fit connection between the HPD module and the PCB is usually completed using a toggle press or dedicated equipment. It is recommended to use dedicated equipment that can control pressure value, press-in stroke, and press-in speed to ensure good efficiency and press-fit quality.

The design of the upper and lower tooling should ensure that vulnerable components on the HPD module and PCB (such as electronic components soldered on the PCB, other vulnerable onboard components, and module pins) are not subjected to excessive stress that could cause damage.

Recommended press-fit process:

1) Align the press and ensure that the upper and lower parts of the tooling are perpendicular to each other.
2) Place the PCB and module into the tooling and use the tooling guide plate for positioning.

3) Press the module' s press-fit pins into the PCB by moving the upper part of the tooling downward.

Recommended press-in speed:

According to the IEC 60352-5 standard, the press-in speed should be higher than 25 mm/min and should not exceed 500 mm/min; the recommended press-in speed is 100 mm/min. Too low a speed will increase insertion force and cause pin deformation.

Recommended pressure value:

Press-fit is considered complete only when the press-fit force on each pin reaches 50–80 N (the specific value may vary depending on the PCB hole diameter and metal plating thickness). Leapers recommends a typical press-fit force of 50 N per pin, with a maximum not exceeding 80 N. For example, for an HPD 30-pin module, the recommended typical press-fit force is 1.50 kN, with a maximum not exceeding 2.40 kN. Recommended press-fit parameters for each pin are shown in Table 2.

	Unit	Min.	Typ.	Max.
Press-in speed	mm/min	>25 (meets IEC 60352-5 certification)		
Typical press-fit force per pin	N		50	<80
PCB temperature (TG)	℃		125	

Table 2: Press-fit parameters for each pin

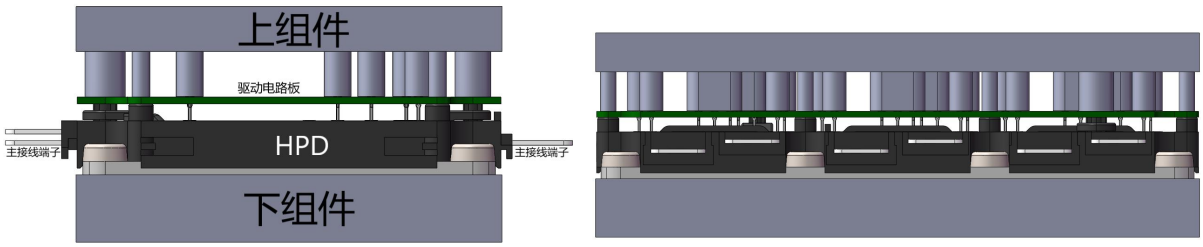

Figure 10: Side and front views of press-fitting with a toggle press

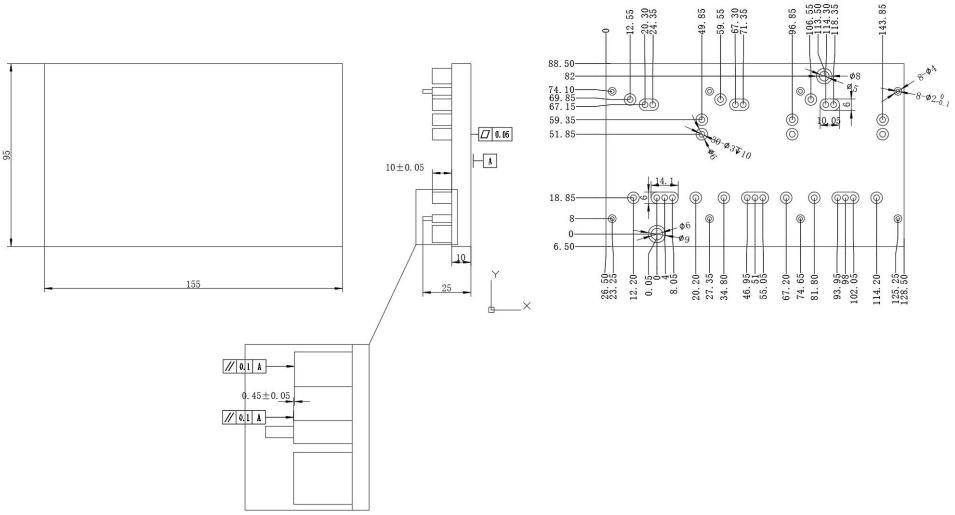

Figure 11: Schematic diagram of upper assembly of toggle press

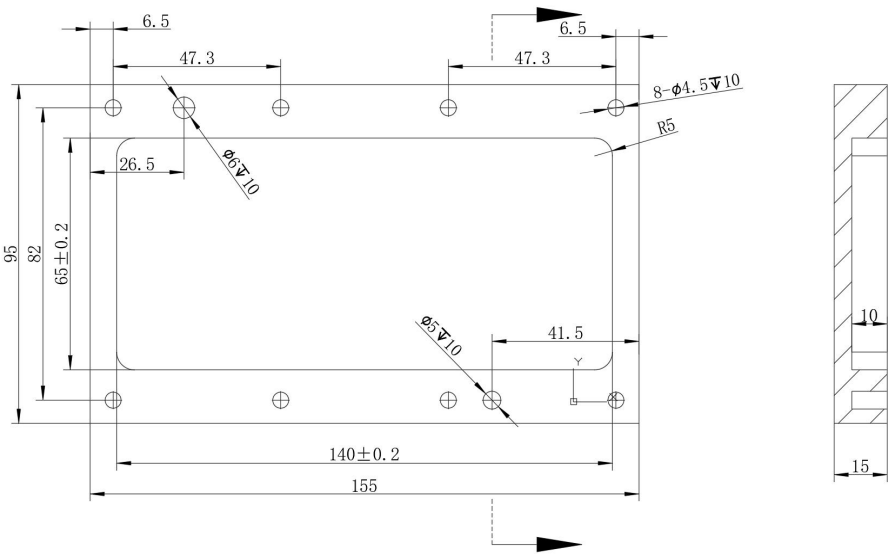

Figure 12: Schematic diagram of lower assembly

3.3.3. Additional PCB Reinforcement

It is recommended to use mechanical methods to eliminate stress between the module and the PCB. Self-tapping screws or similar fastening methods can be used to fix the PCB to the module through the 8 PCB mounting feet on the module, thereby eliminating stress.

3.4. Preparation of the heat dissipation system

The heatsink must dissipate the power losses generated by the module to ensure that the module operating temperature does not exceed the maximum value specified in the datasheet. Therefore, heatsink design is particularly important for stable module operation.

The HPD baseplate uses a direct water-cooling design. The baseplate is made of pure copper with nickel plating and is suitable for conditions such as pure water/ethylene glycol mixed coolant.

3.4.1. Heatsink

The heatsink material should have good compatibility with the nickel-plated copper baseplate of the HPD module and should have certain mechanical strength and corrosion resistance.

Recommended materials include 6060 T6 or AlMgSi0.5.

Heatsink design requirements:

Surface roughness: Ra ≤ 6.3;

Flatness: ≤ 50 μm;

Select a discrete or integrated HPD module heatsink according to the customer’ s actual

needs. A discrete HPD heatsink is shown in Figure 13. An integrated heatsink is directly integrated with the controller housing. When designing the controller housing, the heatsink can be designed synchronously according to the HPD module dimensions and formed integrally after machining.



Figure 13: Example of discrete HPD heatsink

3.4.2. Sealing Ring

Considering the serious threat of coolant leakage to the system, a suitable sealing ring is critical for the water-cooling heat dissipation system. The module baseplate has a 6.5 mm-wide flat sealing surface surrounding the entire pin-fin area (see Figure 14). Combined with `a 4 mm-deep sealing-ring groove and conditions in which the sealing area positioning and cooling system alignment error are less than ±1 mm, good sealing can be achieved. If the customer wishes to facilitate assembly and obtain a higher robustness margin, a single sealing ring may be used. The sealing ring material should have good heat resistance, aging resistance, corrosion resistance, and hot-water resistance, and should be elastic and have certain mechanical strength. EPDM-70 or materials with similar performance are recommended. Figure 15 shows a

Freudenberg EPDM70 sealing ring, sample number YA-15070-E7061; Figure 16 shows a Trelleborg sealing ring, sample number C-YAWC000080E7558.

Note: If the sealing ring is incorrectly installed in the heatsink groove, it may cause deformation of the power module baseplate or insufficient sealing, and further cause coolant leakage. After incorrect assembly, repair or rework is not possible.

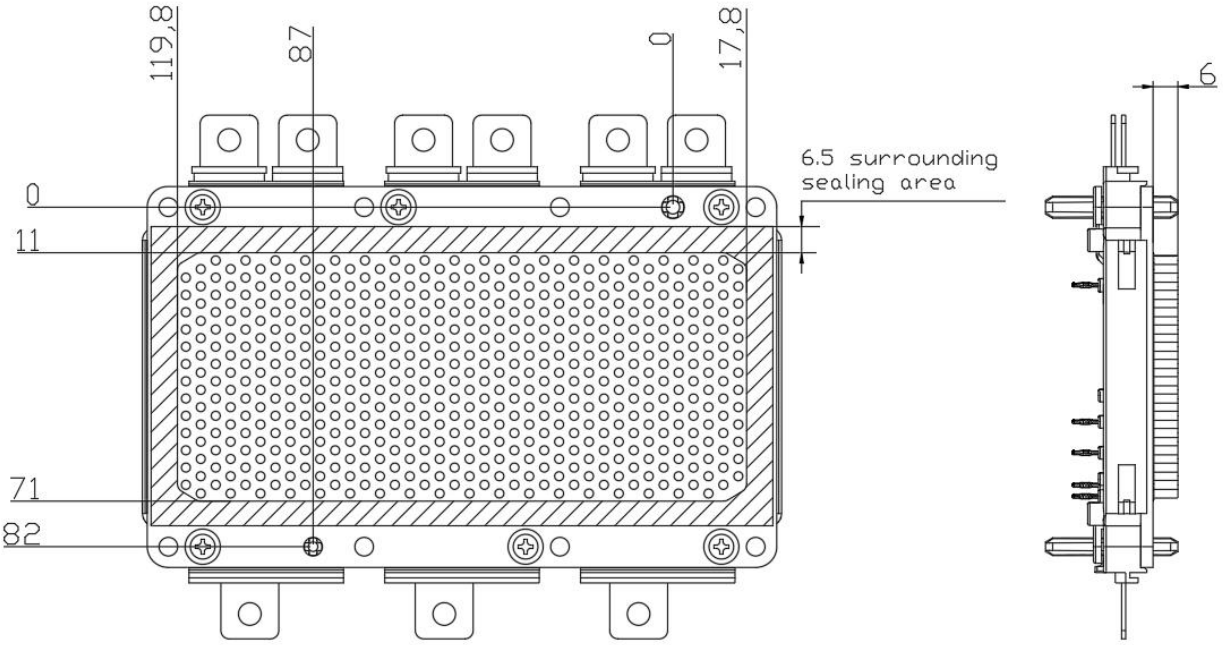

Figure 14: 6.5 mm wide sealing area around the pin fins

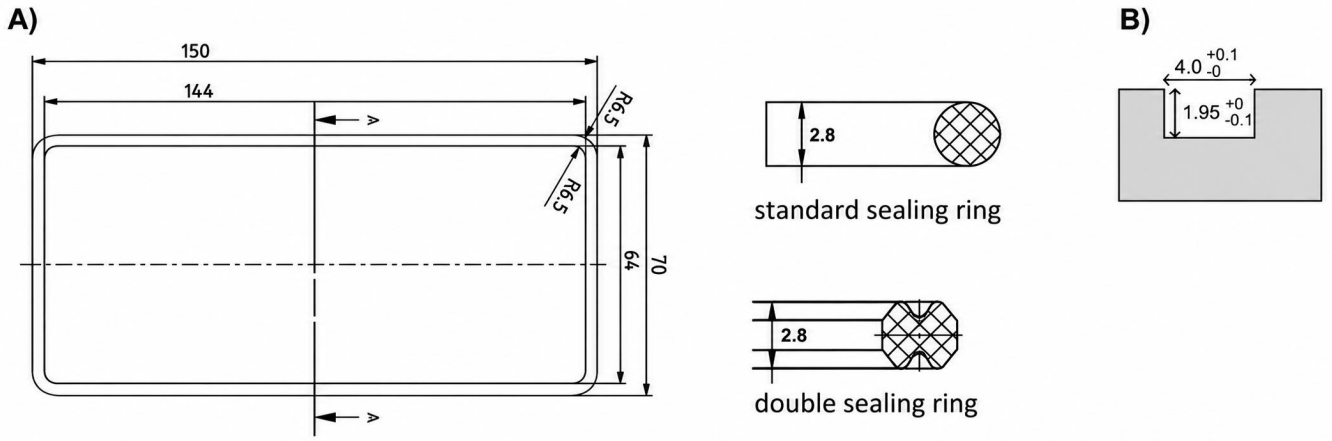

Figure 15: EPDM 70 sample sealing ring (A) and corresponding sealing groove dimensions in the heatsink (B)

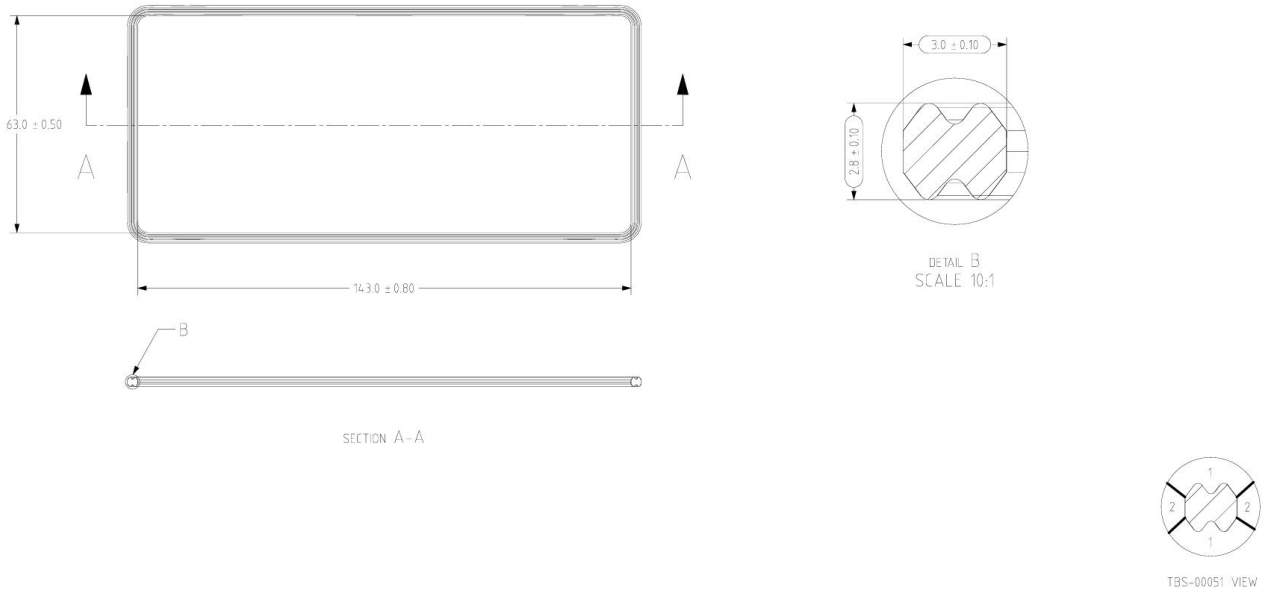

Figure 16: Trelleborg C-YAWC000080E7558

3.4.3 Coolant

The power module is only one component in the entire cooling system, and general recommendations for coolant cannot be given. The following requirements may be referenced:

- The coolant and its anti-corrosion protection system must be compatible with the aluminum heatsink material and the nickel-plated copper baseplate of the module.
- Other components in the cooling system must also be compatible with the coolant type. For example, avoid using zinc screws and chrome-plated parts.
- The coolant mixing ratio must meet the antifreeze requirements under application conditions, and freezing of the coolant must be avoided. Freezing will cause deformation of the power module baseplate and may cause coolant leakage and/or insulation failure.

Note: Avoid using coolant that is incompatible with the anti-corrosion protection system or the module. As shown in Figure 17, using tap water as coolant will cause corrosion and contamination of the heatsink and module pin fins.

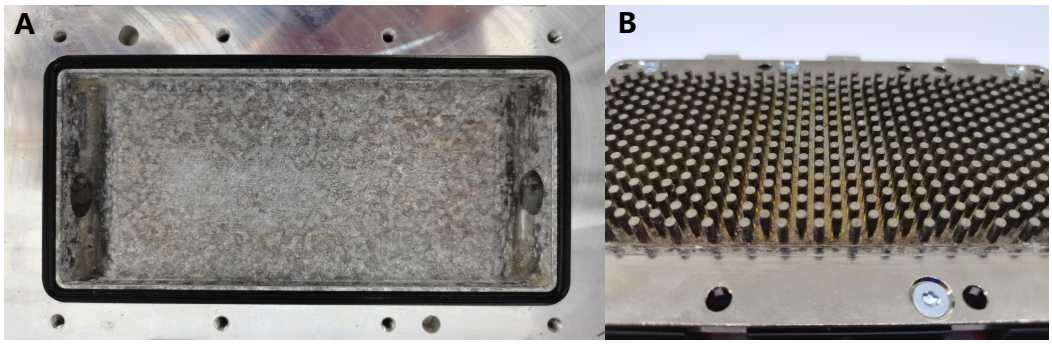

Figure 17: Corrosion of nickel-plated copper cooling fins caused by the use of tap water as coolant

3.5. Mounting the Module to the Heatsink

3.5.1. Installation of heatsink screws

As shown in Figure 18, use M4×10 ISO 7380-2 A2 or M4×10 ISO 7380-2 A2 TX screws to secure the module baseplate to the heatsink. The parameters in Table 4 are based on an AlMgSi0.5 heatsink. The installation parameters listed in Table 3 are based on an AlMgSi0.5 heatsink.

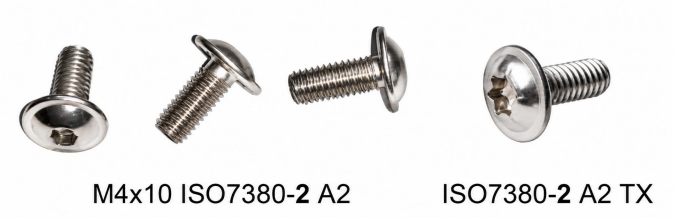

Figure 18: Example of recommended screws

	Unit	Min.	Typ.	Max.
Tightening torque	N·m	1.8	2.0	2.2
Installation speed	rpm			400
Effective screw length in heatsink	mm	6		

Table 3: Recommended baseplate fastening parameters

Note: The tightening torque shall be determined according to the mechanical strength and design of the heatsink.

3.5.2. Sequence for tightening heatsink screws

Tightening sequence: B2→B6→B3→B7→B4→B8→B1→B5. Screw mounting positions are shown in Figure 19.

It is recommended to first pre-tighten the screws at 0.5 N·m in the above sequence, then tighten them at 2.0 N·m in the same sequence; if necessary, recheck the tightening torque in the same sequence.

Note: During installation, avoid damaging the coating in the sealing area, ensure that the pin fins are not mechanically deformed, and prevent scratches on the coating.

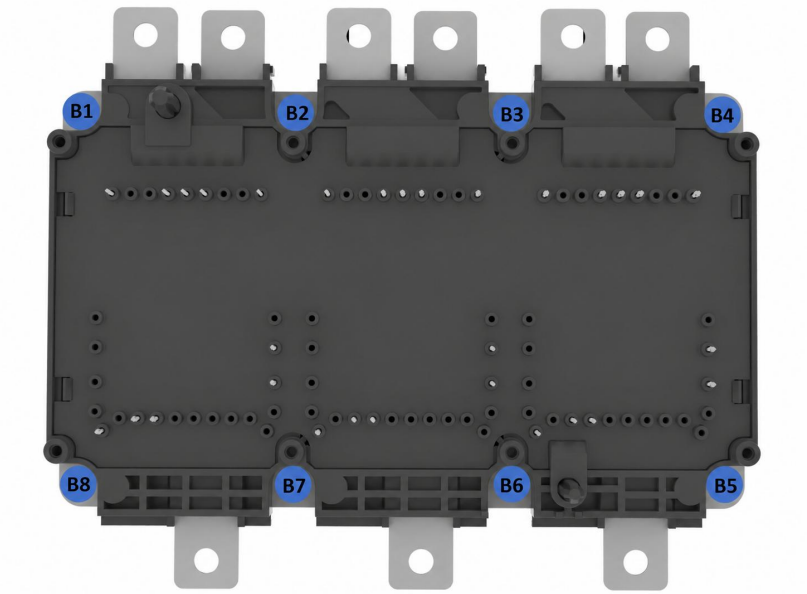

Figure 19: Schematic diagram of heatsink screw installation sequence

3.6. Mounting the Module to the Bus-bar

3.6.1. Tightening torque of power terminals

Leapers Semiconductor' s power terminals are tin-plated copper busbars, suitable for screw mounting and soldering. The following connection methods are recommended: M5 or M4 ISO 7380-2-A2-(TX) screws and corresponding rivet nuts; or M5 ISO 7380-2-A2-(TX) screws with M5 ISO 6923 nuts. Recommended terminal screw tightening parameters are shown in Table 4.

	Unit	Min.	Typ.	Max.
Tightening torque	N·m	3.6	4.0	4.4
Tightening speed	rpm			400

Table 4: Recommended terminal screw fastening parameters

Although the power terminal structure is robust, the system installation design should ensure that the force applied to the power terminals of the power module is as small as possible. The maximum allowable force that the Leapers HPD power module can withstand in each direction is shown in Figure 19.

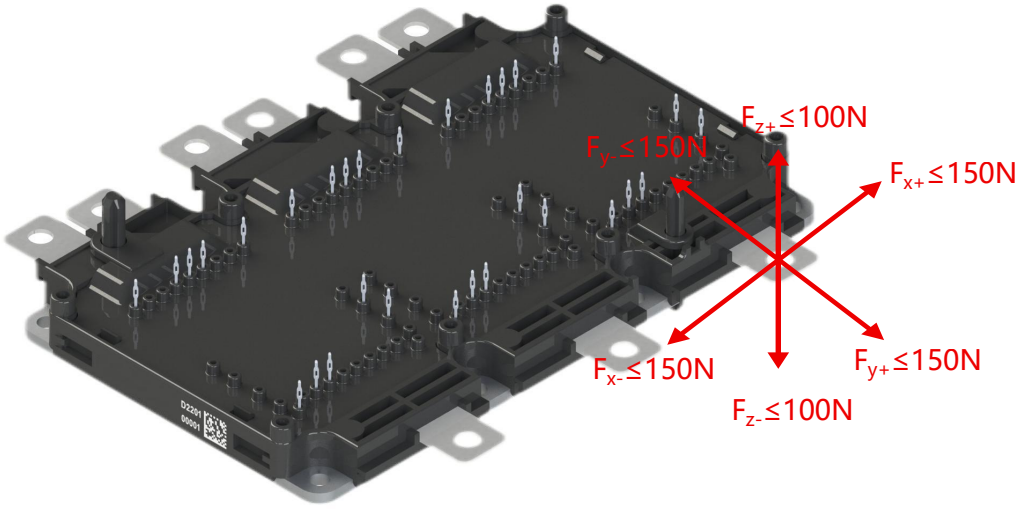

Figure 19: Maximum allowable stress that the module can withstand in each direction

Note: The power terminals are made of tin-plated copper. The plating protects the copper against visual discoloration and oxidation during the period from module production to installation. After assembly, the tin plating no longer provides this protection, and its contact resistance is the same as that of unplated pure copper power terminals. To be compatible with screw-type and rivet connections, the coating must be as soft as possible. Therefore, scratches or incompletely tin-plated power terminal edges caused by stamping processes will inevitably occur. The above conditions do not affect product performance or quality and are not grounds for rejection.

4. Storage and Transportation

During transportation and storage, HPD modules should be protected from impact and extreme environmental conditions. Although these modules can be stored at temperatures above those specified in the datasheet, this is still not recommended.

The storage conditions specified in EN60721-3-1 should be followed, with a maximum storage period of 2 years.

If HPD modules are stored under recommended conditions, no pre-drying treatment is required before assembly.

About this document:

This document is the installation manual for HPD power modules produced by Wuxi Leapers Semiconductor Co., Ltd.

Warning:

Leapers HPD power modules may contain elements or substances harmful to the environment. Improper disposal may cause unnecessary environmental pollution. For more information, please contact the sales representative of Wuxi Leapers Semiconductor Co., Ltd.

Disclaimer:

HPD power modules produced by Wuxi Leapers Semiconductor Co., Ltd. are suitable for conventional application scenarios described in the datasheet/instructions. If the customer intends to use them in unconventional applications, such as aerospace, life-critical medical equipment, etc., they must consult Wuxi Leapers Semiconductor Co., Ltd. and obtain company approval before use. All liability arising from unauthorized use in unconventional applications shall be borne by the customer.

The information provided in this installation manual is only for installation and use recommendations for Leapers HPD power modules and shall not be regarded as a commitment or warranty by Wuxi Leapers Semiconductor Co., Ltd.

Wuxi Leapers Semiconductor Co., Ltd. declares that it makes no warranties or guarantees of any kind regarding the information contained in this installation manual and assumes no responsibility for the information contained therein, including but not limited to guarantees of non-infringement of any third-party intellectual property rights.

For more information about products, technology, delivery terms, prices, etc., please contact the sales representative of Wuxi Leapers Semiconductor Co., Ltd. (sales@leapers-power.com).

Wuxi Leapers Semiconductor Co., Ltd. reserves the right to update this installation manual without prior notice of version updates.

5. Revision History

Version	Revision Description	Date	Revised by	Approved by
V1.1	Initial version creation	2022.08	Jerry.Lu	-
V2.0	Modified some installation parameters	2024.07	Reking.Jia	Jerry.Lu
V2.1	Revised	2026.10	Reking.Jia	